Electrolux PROFESSIONAL

Eco Preparation 1000 mm Worktop Cupboard with Upstand

ITEM #

MODEL #

NAME #

SIS #

AIA #

132862 (MS1017N) WorkTop Cupboard, with 100mm upstand, 1000mm

Short Form Specification

Item No.

Made entirely from stainless steel. Inner welded frame in stainless steel. Unique connection of panels to inner frame. Worktop in 304 AISI stainless steel (50mm high) incorporates a layer of sound deadening material and has upturned edges. Sound-deadened

APPROVAL:

Main Features

- Ideal for central positioning in the kitchen, either as island installation or back to back.
- Worktop cupboard can be mounted on 125 mm diameter castors (2 with brakes) using the optional accessory kit.
- Handles in stainless steel for better hygiene and reliability.
- Sturdiness, stability and reliability of table accurately tested.
- 100 mm upstand with 13mm depth and 10 mm radioused corner, designed to be used against a wall.

Construction

- Inner welded frame in stainless steel to guarantee superior strength and stability.
- Handles directly built into the sliding doors.
- Equipped with intermediate shelf which can be positioned at three different heights.
- Intermediate shelf in stainless steel with riveted corners and trasversal reinforcement in stainless steel.
- Sturdy sound-deadened sliding doors on tracks located flush to the front of the frame.
- Easy access to the cupboard interior on all lengths guaranteed by the use of only 2 doors.
- Constructed entirely in stainless steel to offer maximum durability.
- Constructed entirely in stainless steel to offer maximum durability.
- Base panel has 40mm high profile, is 8/10 in thickness with upturned edges and bar reinforcement. It is welded to legs for further structure reinforcement.
- 304 AISI stainless steel feet, 150 mm high and 54 mm in diameter, adjustable by -35/+25 mm.
- 50 mm worktop in 304 AISI stainless steel.

Optional Accessories

- Wheel kit for cupboards, 4 wheels (2 with brakes), D=100 mm — PNC 855299 ❑

Eco Preparation
1000 mm Worktop Cupboard with Upstand

Front

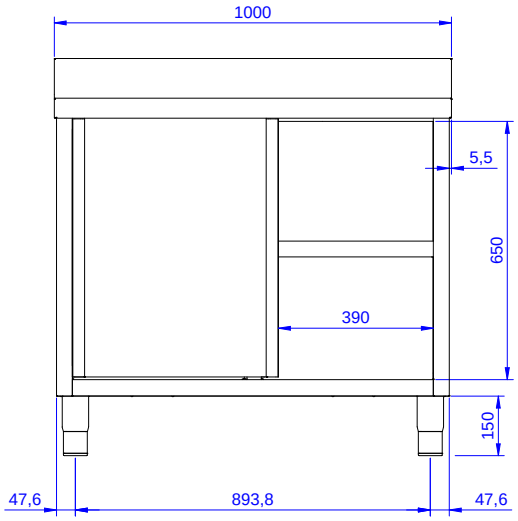

Side

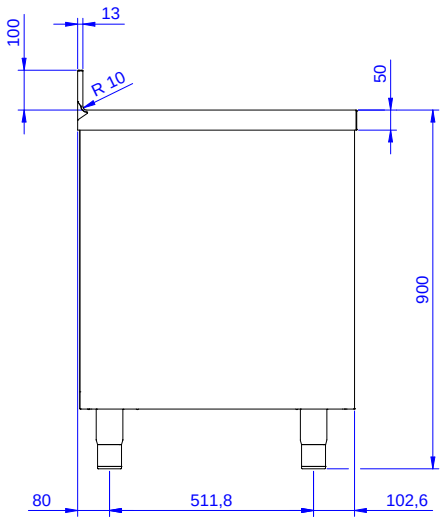

Top

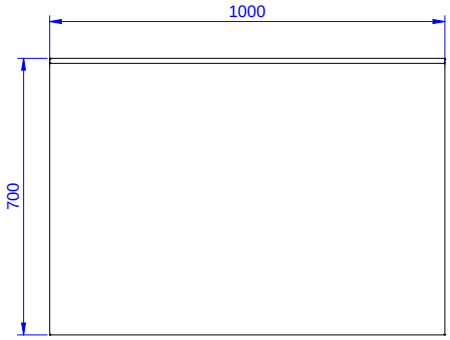

Key Information:

Cabinet width:	
132862 (MS1017N)	945 mm
Cabinet depth:	645 mm
Cabinet height:	610 mm
External dimensions, Width:	1000 mm
External dimensions, Depth:	700 mm
External dimensions, Height:	1000 mm
Upstand Dimensions, Height:	100 mm
Upstand Dimensions, Depth:	13 mm
Upstand Dimensions, Radius:	R=10
Worktop thickness:	50 mm
Net weight:	50 kg

The company reserves the right to make modifications to the products without prior notice. All information correct at time of printing.

2026.07.02